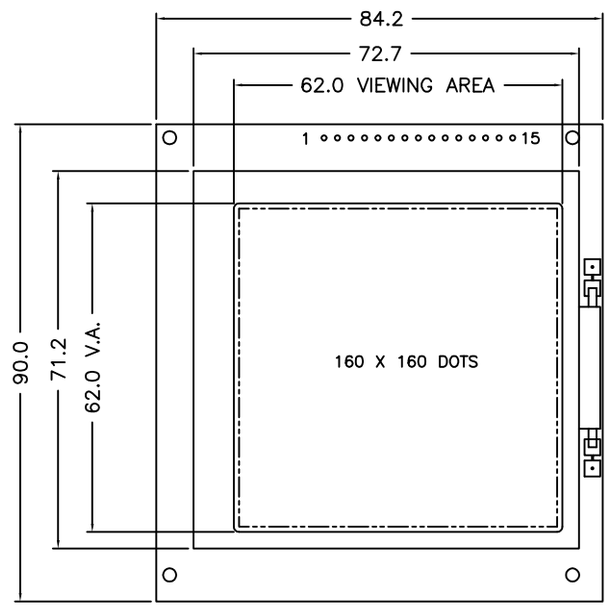

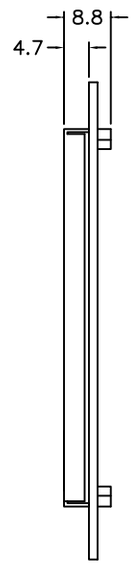

INTERFACE TABLW		
PIN #	SYMBOL	FUNCTION
1.	Vss	LOGIC POWER (0V, GROUND)
2.	M	ALTERNATE (INVERT) SIGNAL FOR LCD DRIVE
3.	FLM	FRAME (SYNC) SIGNAL
4.	CL1	DATA LATCH SIGNAL
5.	CL2	DATA SHIFT CLOCK SIGNAL
6.	D3	4–BIT DATA BUS
7.	D2	
8.	D1	
9.	D0	
10.	Vee	POWER SUPPLY FOR LCD DRIVE
11.	VDD	LOGIC POWER (+5V)
12.	Vo	LCD CONTRAST ADJ. VOLTAGE
13.	INH	HIGH–DISPLAY ON LOW–DISPLAY OFF
14.	EL1	EL PANEL POWER SUPPLY
15.	EL2	
16.	EL3	
17.	EL4	

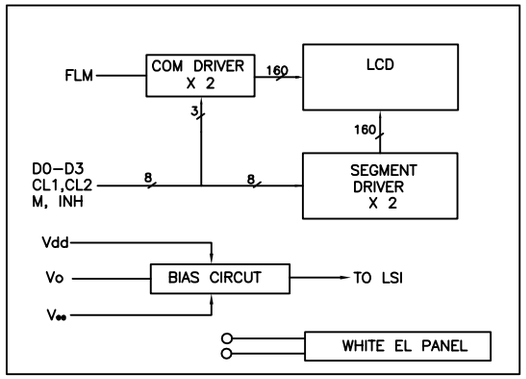

POCULAR FMG16161–01