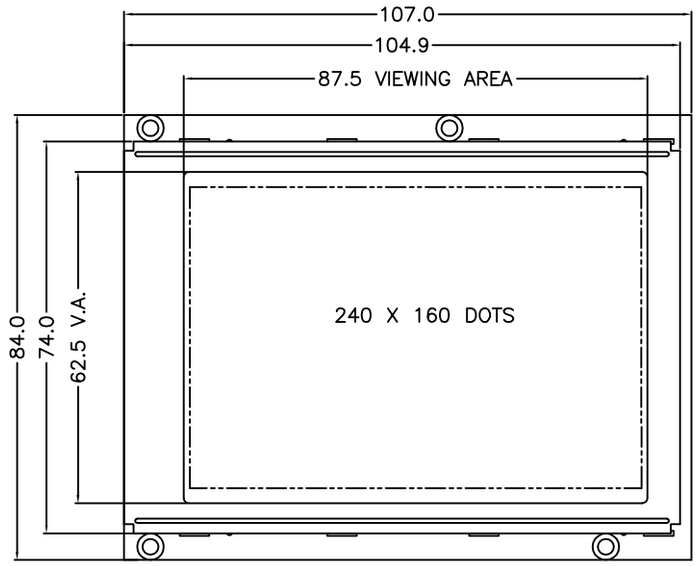

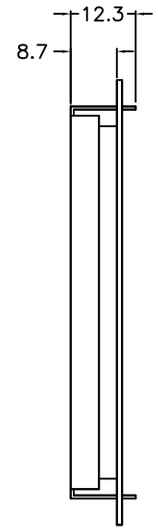

Y–G BACKLIGHT

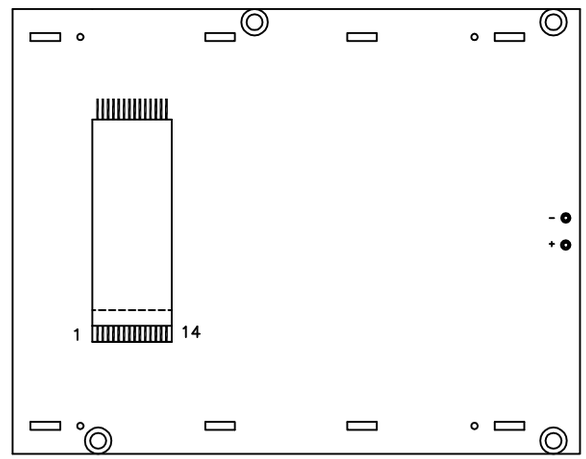

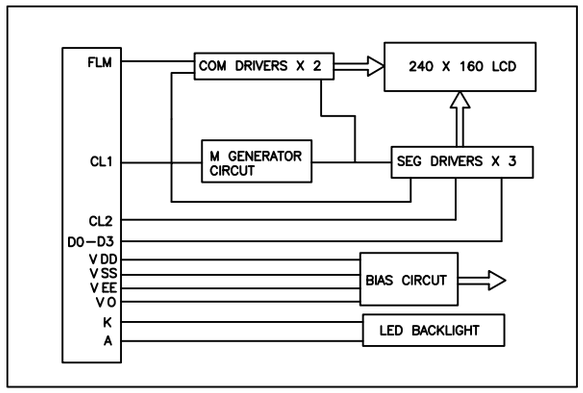

CONNECTOR PINOUT CN1		
PIN#	SYMBOL	FUNCTIONS
1	Vss	POWER SUPPLY (0V, GND)
2	VDD	POWER SUPPLY FOR LOGIC 3.3V
3	Vee	POWER SUPPLY FOR LCD DRIVER
4	Vo	LCD CONTRAST ADJUSTMENT
5	M	ALTERNATE SIGNAL FOR LCD
6	CL2	DATA SHIFT
7	CL1	DATA LATCH SIGNAL
8	FLM	FRAME PULSE
9	DB0	4– BIT DATA BUS
10	DB1	
11	DB2	
12	DB3	
13	LED–	LED BACKLIGHT –
14	LED+	LED BACKLIGHT + (9.8V)

POLAR FMG24161–51