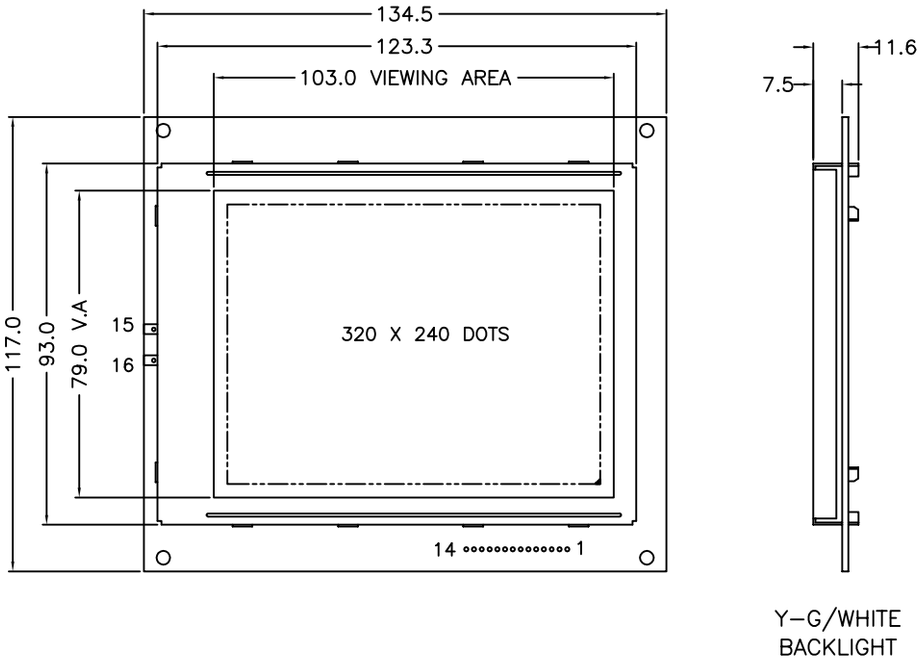

CONNECTOR PINOUT			
PIN #	SYMBOL	FUNCTION	
1.	V_O		OPERATING VOLTAGE FOR LCD (–32V)
2.	V_{EE}		POWER SUPPLY VOLTAGE FOR LCD (35V)
3.	D3	H/L	4–BIT DATA BUS
4.	D2		
5.	D1		
6.	D0		
7.	V_{SS}		GROUND
8.	V_{DD}		LOGIC POWER SUPPLY (5.0V)
9.	CL2	H→L	DATA SHIFT
10.	CL1	H→L	DATA LATCH SIGNAL
11.	FLM	H/L	FRAME PULSE
12.	K		CATHODE, LED BACKLIGHT (0V)
13.	A		ANODE, LED BACKLIGHT (18.9V)
14.	NC		NO CONNECTION
15.			BACKLIGHT+
16.			BACKLIGHT–

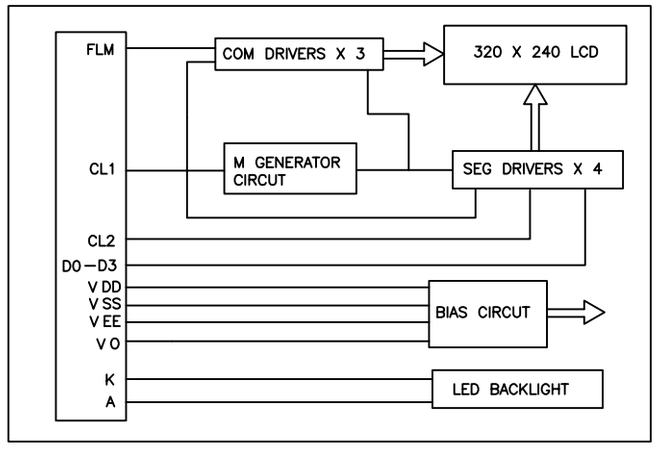

OCULAR FMG32242–01