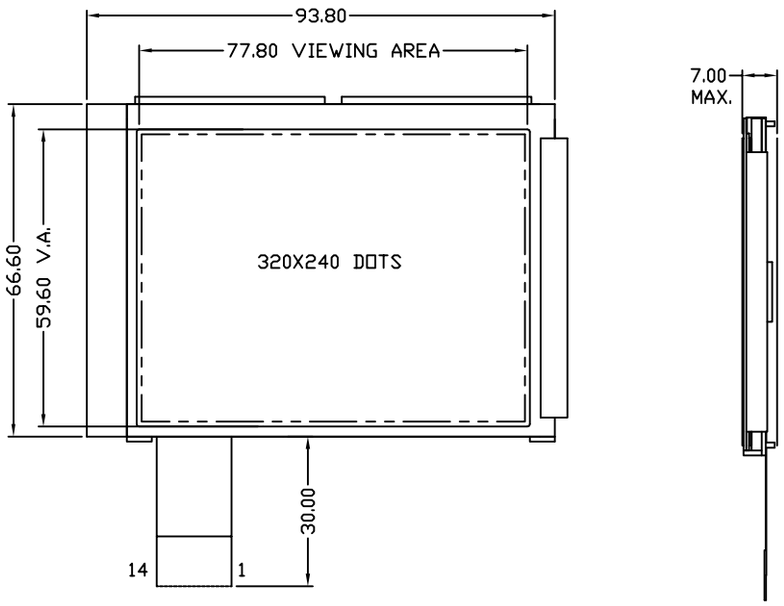

CONNECTOR PINOUT			
PIN #	SYMBOL	LEVEL	FUNCTION
1.	VDD		LOGIC POWER SUPPLY (3.3V)
2.	VSS		GND
3.	VLCD		DISPLAY DRIVE VOLTAGE (21.7V)
4.	FLM		THE FLM SIGNAL INDICATING THE BEGINING OF EACH DISPLAY CYCLE.
5.	–		NO CONNECTION
6.	CL1	H→L	DATA LATCH SIGNAL
7.	CL2	H→L	DATA SHIFT
8.	D0	H/L	4–BIT DATA BUS
9.	D1		
10.	D2		
11.	D3		
12.	$\overline{\text{DISPOFF}}$		CONTROL LCD ON/OFF
13.	VLED		POWER SUPPLY FOR LED B.L (+)
14.	VLSS		POWER SUPPLY FOR LED B.L (–)

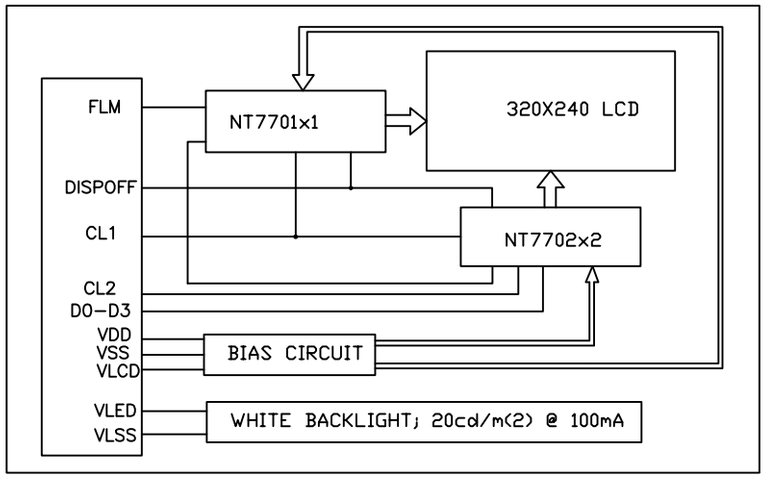

OCULAR FMGA6381–51