REV.	DESCRIPTION:	BY	DATE
–	RELEASED	SL	6/9/99

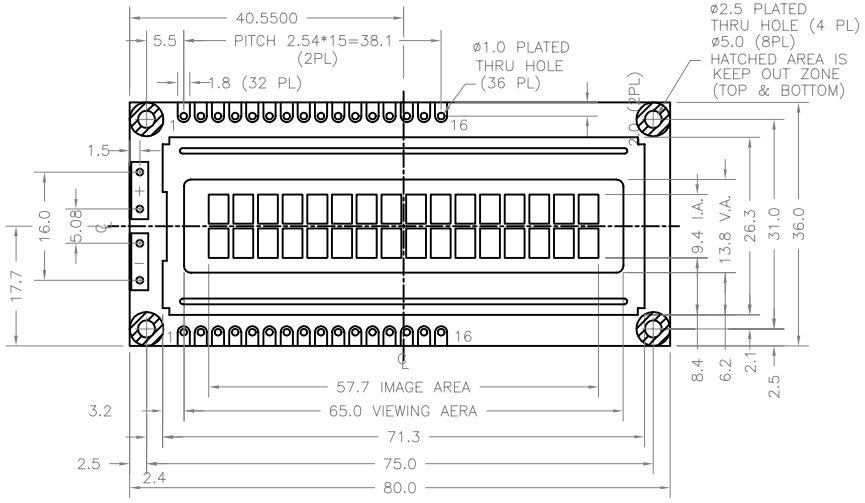

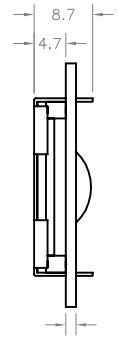

EL BACKLIGHT / NO BACKLIGHT

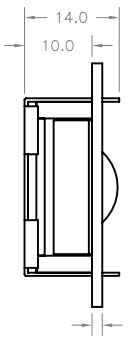

LED BACKLIGHT

PIN ASSIGNMENT		
PIN#	SYMBOL	FUNCTION
1	Vss	POWER SUPPLY (GND)
2	Vdd	POWER SUPPLY (+5V)
3	Vo	CONTRAST ADJUST
4	RS	REGISTER SELECT SIGNAL
5	R/W	DATA READ/WRITE
6	E	ENABLE SIGNAL
7	DB0	DATA BUS
8	DB1	
9	DB2	
10	DB3	
11	DB4	
12	DB5	
13	DB6	
14	DB7	
15	LED+	LED BACKLIGHT +
16	LED–	LED BACKLIGHT –

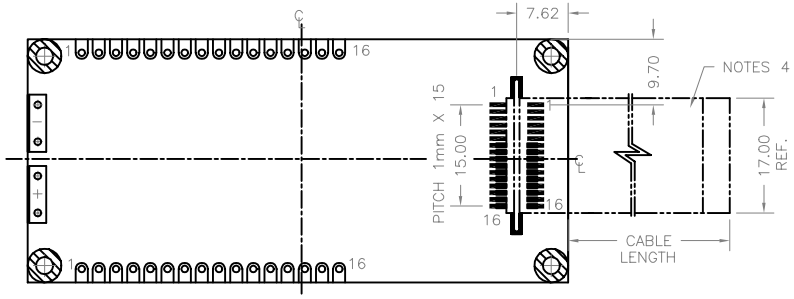

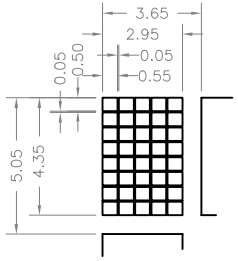

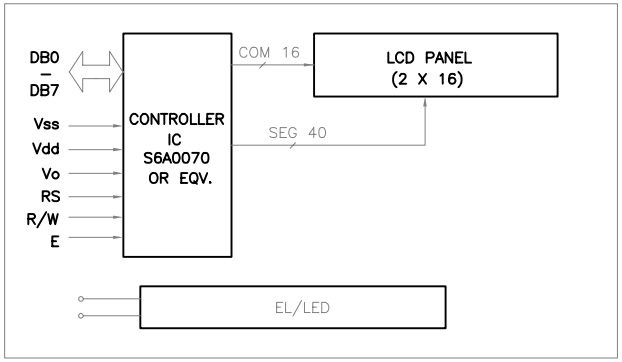

NOTES:
1. ALL DIMENSIONS IN MM
2. TOLERANCES UNLESS OTHERWISE SPECIFIED ±0.2MM
3. REFER TO MODULE PRODUCT SPECIFICATION FOR SPECIFIC CONFIGURATIONS AND BILL OF MATERIALS
4. OPTIONAL FLAT CABLE. VARIOUS CABLE LENGTHS AND CONFIGURATIONS ARE AVAILABLE

OCULAR

THIS DOCUMENT IS CONFIDENTIAL PROPRIETARY INFORMATION OF OCULAR CORPORATION AND SHALL NOT BE DISCLOSED OR COPIED OR USED FOR ANY PURPOSE OTHER THAN FOR WHICH IT IS SPECIFICALLY FURNISHED WITHOUT THE PRIOR WRITTEN CONSENT OF OCULAR CORPORATION.

ENGR MANAGER:		DATE:	
DWN BY:	S.LIN	DATE:	5/25/99
DRAWING TITLE :	OM16211 MODULE		
DRAWING No.:	16211MOD		REV: –
SCALE :		SHEET:	OF